ITEM 項目	PARTS NAME 零件名稱	Q'TY 數量	MATERIAL 材質	FINISH/REMARK 處理/備註
1	TOP COVER	1	A.B.S	(Black)
2	BOTTOM COVER	1	A.B.S	(Black)
3	HOUSING	1	P.B.T+G.F	UL-94V-0 (Black)
4	LATCH	2	STAINLESS	Non-plating
5	CONTACT	12	Phosphor Bronze	Gold flash selective

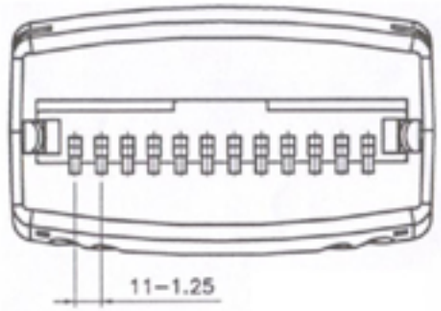

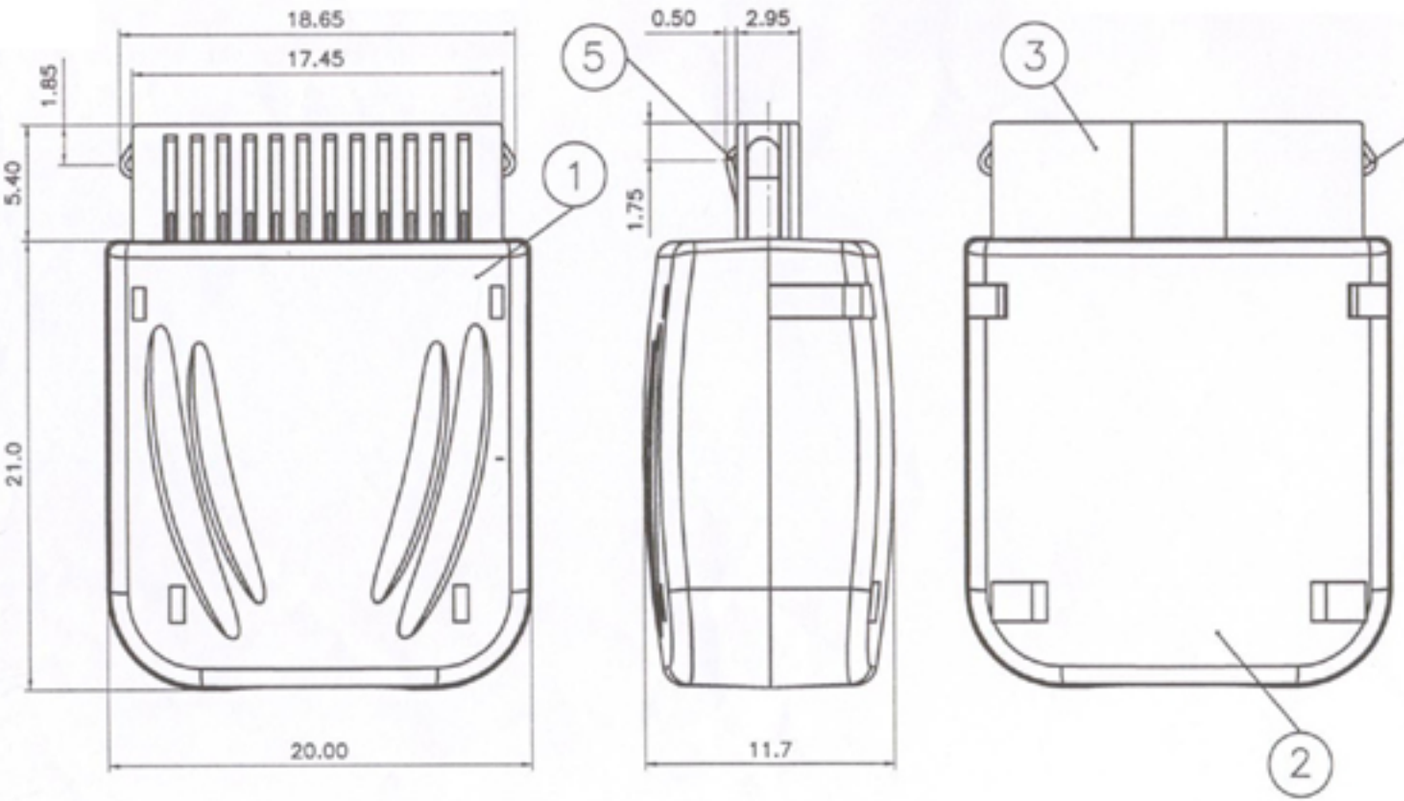

SPECIFICATION
MATERIAL
See drawing
STANDARD DATA
Rating current:1.0A
Applicable wire: AWG#26 Max.
Operating temperature: -30°C ~ +60°C
Storage temperature: -40°C ~ +85°C
ELECTRICAL
Insulator resistance: 1000M ohms Min. @ 250 VDC
Withstanding voltage: 100 VAC / minute
Contact resistance: 50 m ohms Max.
MECHANICAL
Mating force: 30N(3.06kgf) Max.
Unmating force (Without lock): 4.2N(0.43kgf) Min.
Durability: 10000 cycles Min.
Contact retention force: 4.2N(0.43kgf) Min
PART NO.

A 0 1 - 563 - 12 01

SERIES
A=Plug in
TYPE
0=1.25mm pitch
CONTACT TYPE
1=Solder type

MODEL NO.

TYPE NO.
01=Type 1
CONTACT NUMBER
12=12position

CYPRESS INDUSTRIES

REV. 版本	ECN NO. 設變號碼	MARK 記號	REVISIONS 設變內容	SIGN 簽核	DATE 日期
A	EXXXX-XXX	⚠ X 0	-	-	-

UNLESS OTHERWISE SPECIFIED TOLERANCE 尺寸公差
X. ±0.50
.X ±0.30
.XX ±0.20
ANG. ±5°00'

CHECKED 審核 工程部 陳宇麟
APPROVED 承認
DESIGNED 設計 工程部
DRAWN 製圖 許勇欽

UNIT 單位 MM
SCALE 比例 4/1
SIZE 尺寸 A3

TITLE 產品名稱 PLUG IN CONNECTOR Solder type-12 position
PART NO. 產品料號 A01-563-1201
DOC. NO. 文件編號 CUT-563-001
REV. 版本 A